041

ASJ series Residual Current Operated Relay

Installation and Operation Manual V2.4

Acrel Co., Ltd.

Declaration

Please read this instruction carefully before using this product. All pictures, logos and symbols involved are owned by Acrel Co., Ltd. All or part of the content shall not be reproduced publicly without written authorization by non-company personnel.

Please read the instructions and precautions in this operation manual carefully before using this series of products. Acrel will not be responsible for personal injury or economic loss caused by ignoring the instructions in this operation manual.

The equipment is professional electrical equipment, any related operation, need to be carried out by special electrical technicians. Acrel is not responsible for personal injury or financial loss resulting from the error of non-professional personnel.

The contents of this description will be updated and amended constantly, and it is inevitable that there will be a slight discrepancy between the physical product and the description in the product function upgrading. Please refer to the physical product purchased and obtain the latest version of the description through www.acrel-electric.com or sales channels.

Changelog

No.	Time	Versions	Reasons for revision
1	2016.09	V1.3	Add ASJ10L
2	2017.09	V1.4	Delete break line alarm
3	2018.12	V1.5	Add chapter 4.2.2
4	2019.12	V1.6	Delete ASJ10L
5	2020.12	V1.7	Add ASJ10L, modify address, contact
6	2021.04	V1.8	Modify AC type output as open, Modify some mistake, add transformer
7	2021.07	V1.9	Update power supply voltage input
8	2023.07	V2.0	Adjust the format, update the annotation, update the transformer reference current, and add the default value to the address table
9	2024.06	V2.1	Added combination DIP switch function, ASJ10L communication reset function/transformer ratio selection function, etc.
10	2024.11	V2.2	Adjust description of selection
11	2024.12	V2.3	Remove some pictures,change company contact details
12	2025.07	V2.4	Content adjustment
Notes: Communication reset and ratio selection are newly added in ASJ10L-LD1A software version V1.05.			

Contents

1 Introduction 1
2 Type Specification 1
3 Technical Parameters 2
4 Installation Guide 3
4.1 Overall Dimensions and Hole Size 3
4.2 Installation Instructions 4
4.3 Terminals and Wiring 5
4.4 Typical wiring diagram 6
4.5 Matters Needing Attention 6
5 Operating Guide 7
5.1 Description of AC Type Panel 7
5.2 Description of A-Type Panel 7
5.3 Description of LCD Type Panel 8
5.4 Description of Selection 8
5.5 Instructions for Transformer 15
6 Typical Applications 18
7 Programming Menu 18
7.1 Programming Example 20
7.2 Programming Example 22
8 Communication Guide 22
8.1 Communication Protocol 22
8.2 Introduction to Function Code 22
8.3 ASJ10L-LD1A Address Table 24
8.4 1CH Data Explain 25

ASJ series residual current operated relay

1 Introduction

ASJ series residual current operated relay can be combined with low voltage circuit breaker or low voltage contactor to form a combined residual current protection device. It is mainly suitable for TT and TN-S system distribution lines with AC 50Hz and rated voltage of 690V and below. It is used to provide residual current protection for electrical lines to prevent equipment damage and electrical fire accidents caused by residual current. It can also be used to provide indirect contact protection against personal electric shock hazards.

Products meet the requirements of GB/T 22387 *residual current operated relay*.

2 Type Specification

Type	Function	Installation
ASJ10-LD1C	AC-type residual current measurement; Alarm prompt of current crossing line; Rated residual operating current can be measured; Limit non-driving time can be set; Two sets of relay output; With local and remote "test" and "reset" functions.	Guide (DIN35mm)
ASJ10-LD1A	A-type residual current measurement; Current percentage light column display; Rated residual operating current can be measured; Limit non-driving time can be set; Two sets of relay output (settable) [1]; With local and remote "test" and "reset" functions.	
ASJ10L-LD1A [2]	A-type residual current measurement; Rated residual operating current can be measured; Limit non-driving time can be set; Two sets of relay output (settable); Transformer breakage alarm can be set; Pre-alarm value can be set; Return value can be set. With local and remote "test" and "reset" functions. LCD display, 25 event records.	
ASJ20-LD1C	AC-type residual current measurement; Alarm prompt of current crossing line; Rated residual operating current can be measured;	Panel (48*48)

	Limit non-driving time can be set; Two sets of relay output; With local and remote "test" and "reset" functions.	
ASJ20-LD1A	A-type residual current measurement; Current percentage light column display; Rated residual operating current can be measured; Limit non-driving time can be set; Two sets of relay output (settable)note 1; With local and remote "test" and "reset" functions.	

Notes: 1. The function of setting for relay means that you can set the initialization and the output state of relay by yourself through the code dialing on the panel; the specific setting guide can be found from the chapter 5.2.

2. Optional function of meter, RS485 interface, Modbus-RTU Communication, type is ASJ10L-LD1A/C

3 Technical Parameters

Item		Technical Parameters	
		AC type	A type
Auxiliary power	Voltage range	AC110V; AC220V (±10%)	AC/DC85~265V
	Power dissipation	≤5W	
Input	Rated residual operating current $I_{\Delta n}$	0.03, 0.1, 0.3, 0.5 (A)	0.03, 0.05, 0.1, 0.3, 0.5, 1, 3, 5, 10, 30 (A) [3]
	Limit non-driving time Δt	0.1, 0.5 (s)	0, 0.06, 0.1, 0.2, 0.3, 0.5, 0.8, 1, 4, 10 (s) [4]
	Rated residual non-operating current $I_{\Delta no}$	50%$I_{\Delta n}$	50%$I_{\Delta n}$
	Performance characteristics	Sinusoidal AC	Sinusoidal AC And pulsating DC
	Frequency	50Hz±5Hz	50Hz±5Hz
	Operating range	-20% ~ -10%$I_{\Delta n}$	-20% ~ -10%$I_{\Delta n}$
Output	Output mode	One is normally open and another is for transformation	One is normally closed or open, and another is for transformation
	Contact capacity	5A 250VAC 5A 30VDC	AL1:8A 250VAC; 5A 30VDC AL2:6A 250VAC; 5A 30VDC
	Reset mode	Local reset or remote reset	Local reset, remote reset, or automatic reset
Installation and use environment	Temperature	Run temperature: -20℃ ~ +55℃, Storage temperature: -30℃ ~ +70℃	
	Humidity	≤95%RH, no condensation, and no corrosive gas places	

	Elevation	≤2000m
	Class of pollution	Grade three
	Installation category	Type Ⅲ

Notes: 3. ASJ10L-LD1A rated residual operating current $I_{\Delta n}$ is 10mA~30A continuously adjustable;

4. ASJ10L-LD1A limit non-driving time Δt is 0~10S continuously adjustable.

4 Installation Guide

4.1 Overall Dimensions and Hole Size

The appearance and installation dimensions of the ASJ10 series are shown in the figure below. (Unit: mm)

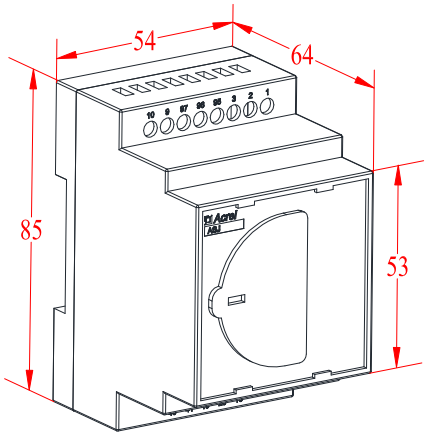

ASJ10 appearance dimensions

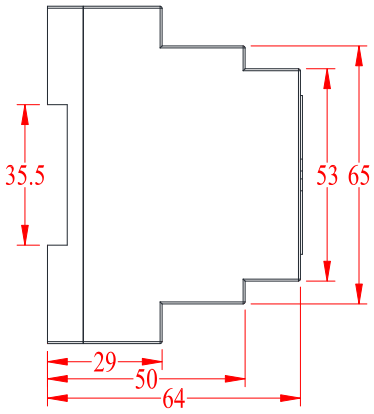

ASJ10 installation dimensions

The appearance and installation dimensions of ASJ10L-LD1A are shown in the figure below. (Unit: mm)

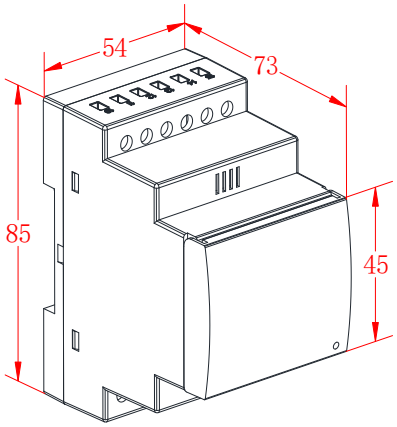

ASJ10L-LD1A appearance dimensions

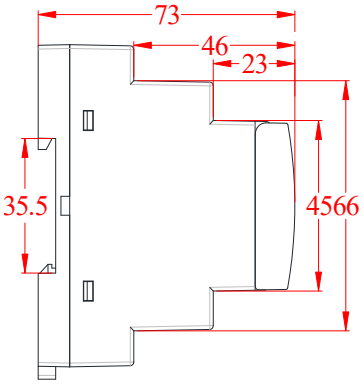

ASJ10L-LD1A installation dimensions

The appearance and installation hole dimensions of the ASJ20 series are shown in the figure below. (Unit: mm)

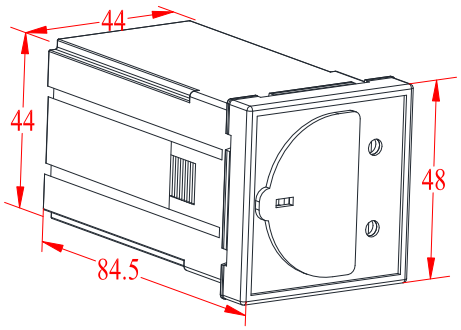

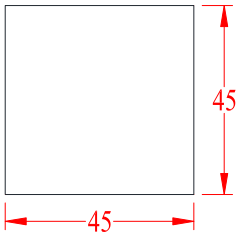

ASJ20 appearance dimensions　　ASJ20 opening dimensions

The specific dimensions of the instrument are shown in the table below.

Device model	Panel size (mm)	Shell size (mm)	Hole size(mm)
ASJ10	——	85*54*64(L*W*H)	——
ASJ10L		80*54*73(L*W*H)	
ASJ20	48*48	44*44*84.5(W*H*D)[5]	45*45

Notes: 5.ASJ20 housing plus wiring terminals, the depth from panel to terminals is 106mm.

4.2 Installation Instructions

4.2.1 Installation Steps

The ASJ10 series instrument is mounted on a guide rail, using a standard 35mm guide rail, as shown in the following figure.

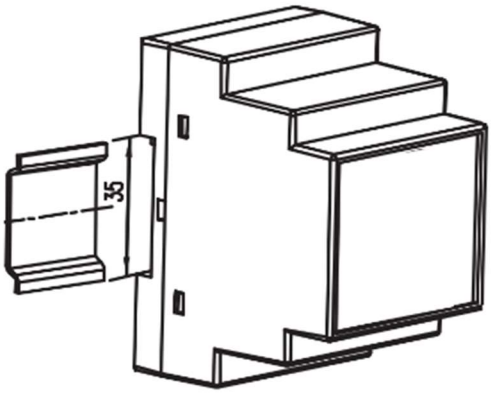

ASJ20 series instrument installation method is panel installation, both sides of the buckle extrusion fixed, the specific operation is as follows:

(1) On the switchboard, choose the appropriate place to cut the 45*45mm^2 mounting hole;

(2) Take out the remaining current relay and remove the fixed buckle;

(3) Install the instrument into the distribution board, and then install it with a buckle.

The specific operation is shown in the figure below.

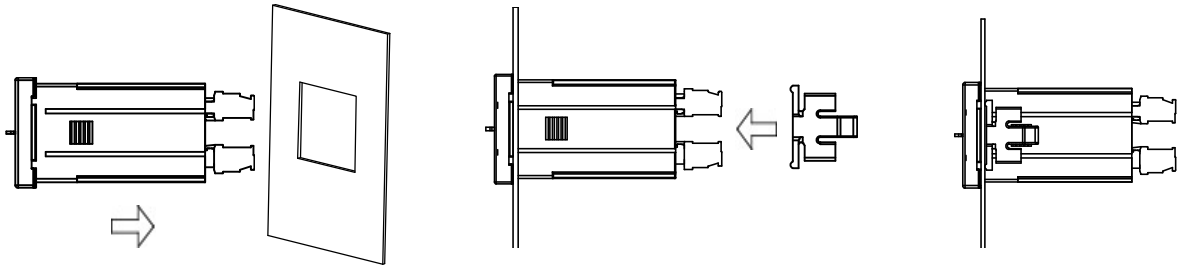

4.2.2 Installation of Accessories

Accessories include residual current transformers and magnetic rings. The remaining current transformer passes through all the phase lines and neutral lines, and is installed in the cabinet with a firm fixation. The secondary side wiring is connected to terminals 40 and 41 of the instrument through a magnetic ring. The installation method of the magnetic ring is shown in the figure below. It is installed near the end of the instrument wiring and the wiring bypasses the magnetic ring for two laps.

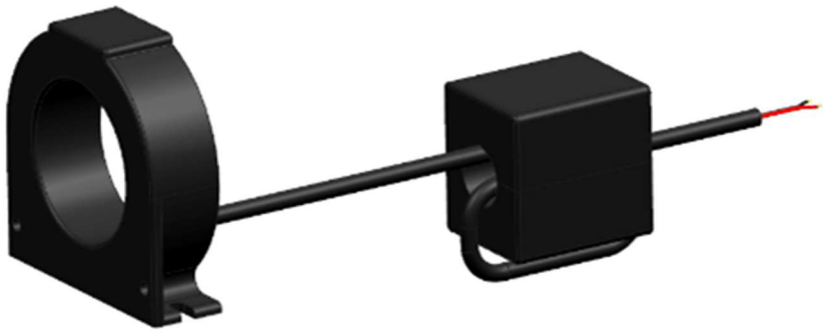

4.3 Terminals and Wiring

4.3.1 Auxiliary power supply and signal input terminal

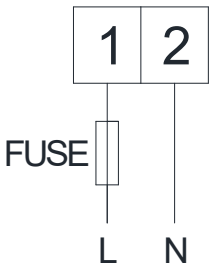

Auxiliary power

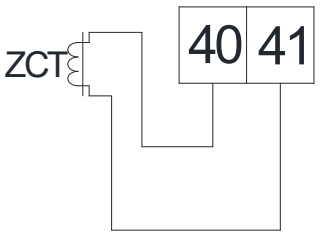

Signal input

4.3.2 Switching quantity input/output terminal

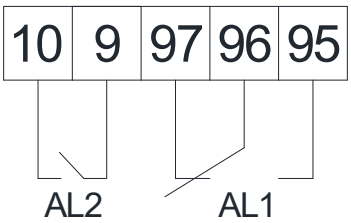

Relay output terminal
(Dry Contact)
AL1: Alarm relay
AL2: Warning relay

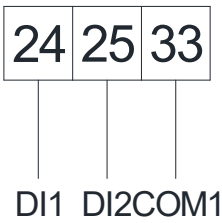

Switching input terminal
(Only ASJ10L-LD1A)

4.3.3 Additional functional terminals

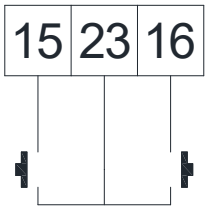

Remote test remote reset

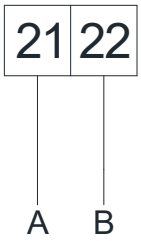

RS485 interface
(Only ASJ10L-LD1A)

4.4 Typical wiring diagram

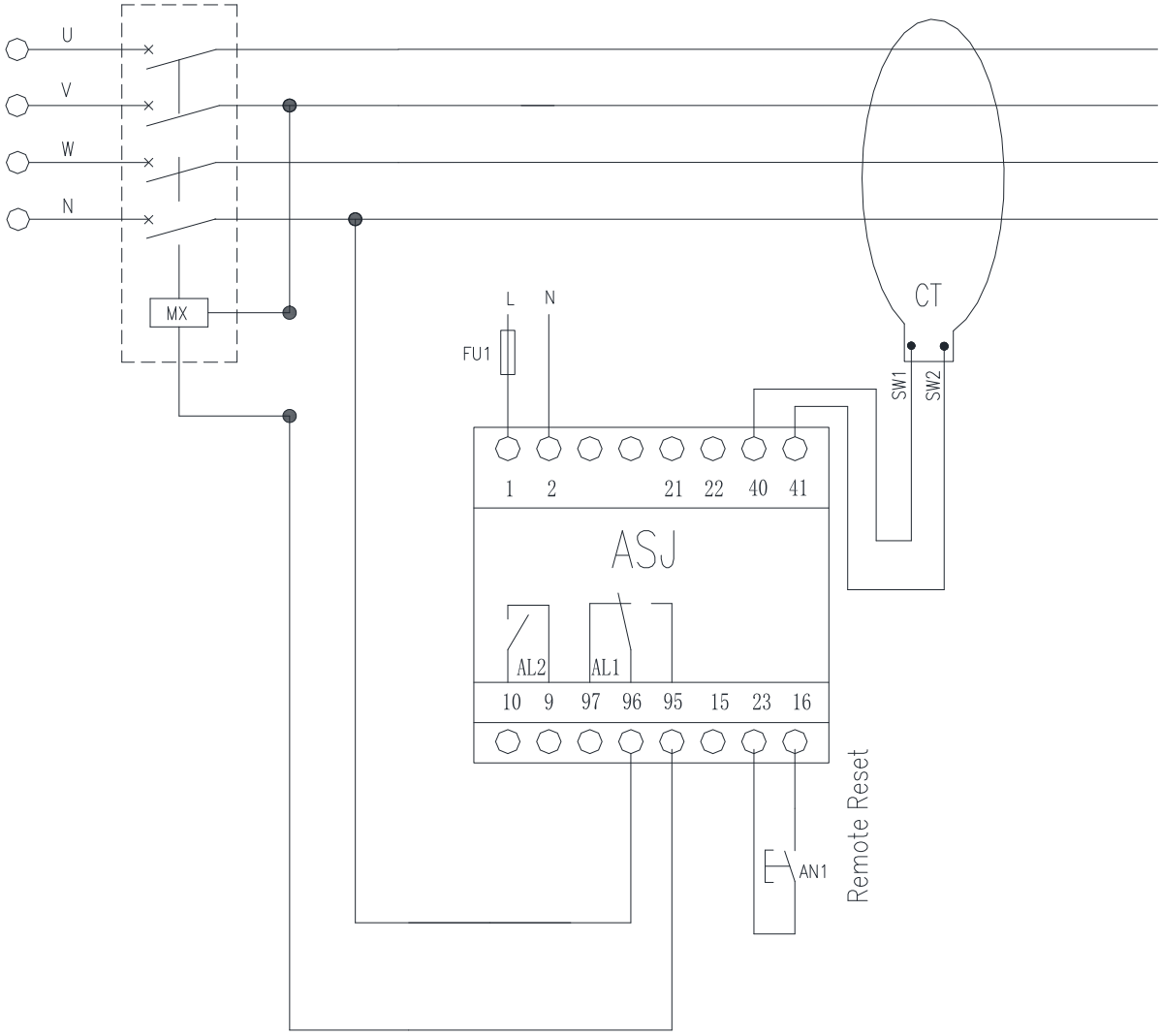

4.5 Matters Needing Attention

(1) The grounding wire (PE) shall not penetrate the remaining current transformer.

(2) For single-phase power grid, only phase lines and neutral lines need to penetrate the residual current transformer.

(3) ASJ10L-LD1A/C provides RS485 interface and adopts Modbus-RTU protocol. Bus connections do not exceed 128 meters.

5 Operating Guide

5.1 Description of AC Type Panel

No.	Name	Function
1	Power light	Always lights when the power supply is normal
2	Reset button	To reset the system
3	Alarm light	Lights when the operating current $I_{\Delta n}$ is exceeded
4	Test button	Self-check, for indicator light and the relay
5	residual current set switch	Providing four settings of residual operating current
6	Limit non-driving time set switch	Providing two settings of limit non-driving time

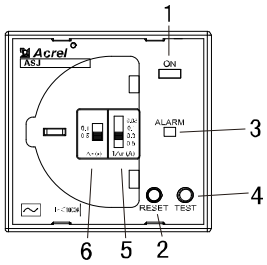

ASJ10-LD1C

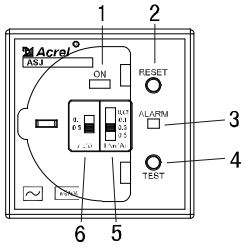

ASJ20-LD1C

5.2 Description of A-Type Panel

No.	Name	Function
1	Power light	Always lights when the power supply is normal
2	Reset button	To reset the system
3	Alarm light	Lights when the operating current $I_{\Delta n}$ is exceeded
4	Test button	Self-check, for indicator light and the relay
5	Residual current set switch	Providing four settings of residual operating current
6	limit non-driving time set switch	Providing two settings of limit non-driving time
7	DIP switch	

DIP switch		Relay AL2		Relay AL1			
A	B	10	9	97	96	95	Normal status
0	0						
0	1						
1	0	Warning					
1	1	Warning					
C		0: manual reset, 1: automatic reset					
D[6]		When AB=01, D=0, AL2 is normally closed during normal operation; When AB=01, D=1, AL2 is normally open during normal operation.					

No.	Name	Function
8	Bar-graph Indicator	Three green LEDs are combined to show the current percentage, which will flash when the current reaches more than 50%, indicating early warning.

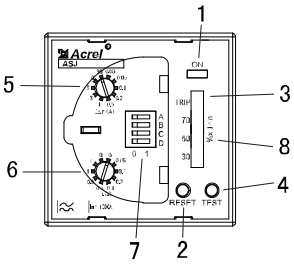

ASJ10-LD1A

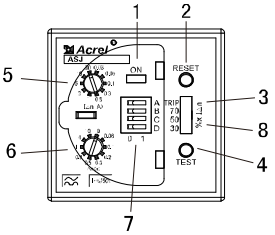

ASJ20-LD1A

5.3 Description of LCD Type Panel

No.	Name	Function
1	Run light	Work often light, communication light flashing
2	Alarm light	Red indicator light, it lights when the leakage current reaches the alarm value
3	Disconnected alarm light	Red indicator light, it lights when the external transformer is disconnected [7]
4	Test key	In normal operation, press key for 2s, relay will operate, backlight will turn red, and alarms will be output. used to check the light and relay
5	Reset key	In operation mode, used to relieve relay operation; In programming mode, used to return to previous menu or mode
6	Td/- key	In SOE page of operation mode, it is used to view the fault records; In programming mode, it is used to enter next menu or subtract 1 from the value
7	Td/+ key	In SOE page of operation mode, it is used to view the fault records; In programming mode, it is used to back last menu or add 1 from the value. Long press the Td/- and Td/+ at the same time, system will start a self-check and reset
8	PROG key	In operation mode, press the key to check SOE; In programming mode, it is used to select, return, confirm and save menu item
9	LCD	LCD displays real-time residual current size, residual current alarm set value, limit no drive time set value [8] and communication status. Normal backlight is green, alarm backlight is red, early warning backlight is yellow

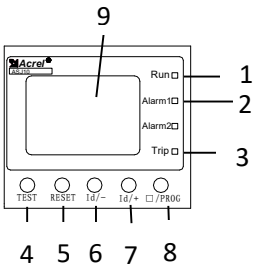

Notes: 6. The function of Dial Code D is newly added in 2023. Products in 2023 and later will start to support this function. Please contact our company for confirmation.

7. When the transformer broken line alarm indicates, the "TEST" key is locked in the invalid state.

8. When the rated remaining operating current is set to 30mA, the action delay time is invalid, and the default action is immediate.

5.4 Description of Selection

This device is mainly used for residual current protection, as a protection for direct electric shock, indirect electric shock, electrical fire and graded protection. In direct electric shock protection, it is only used as supplementary protection. At this time, the rated residual operating current does not exceed 30mA.

5.4.1 Description of action characteristics selection

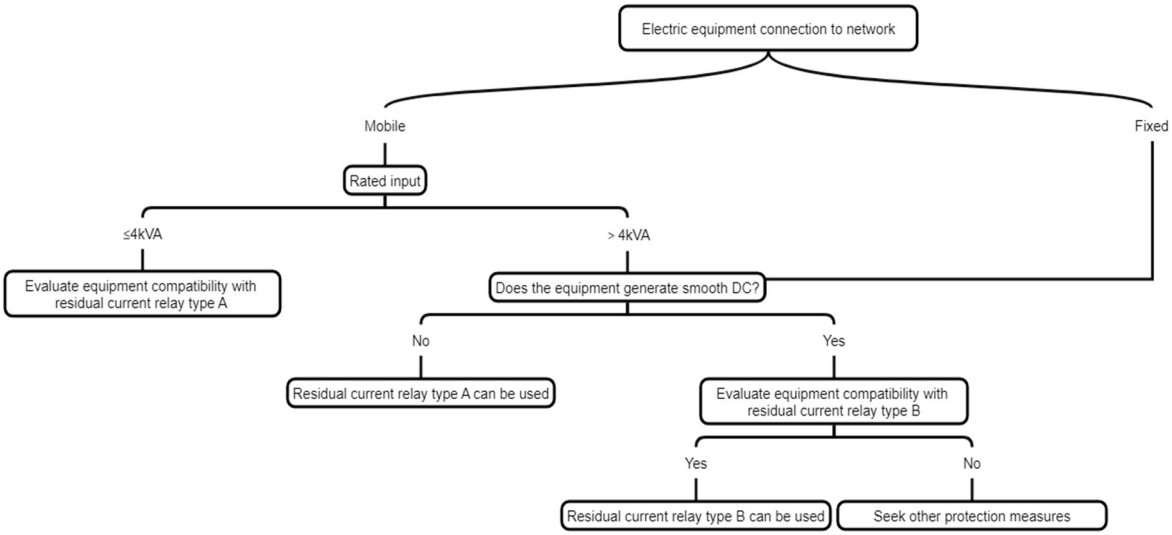

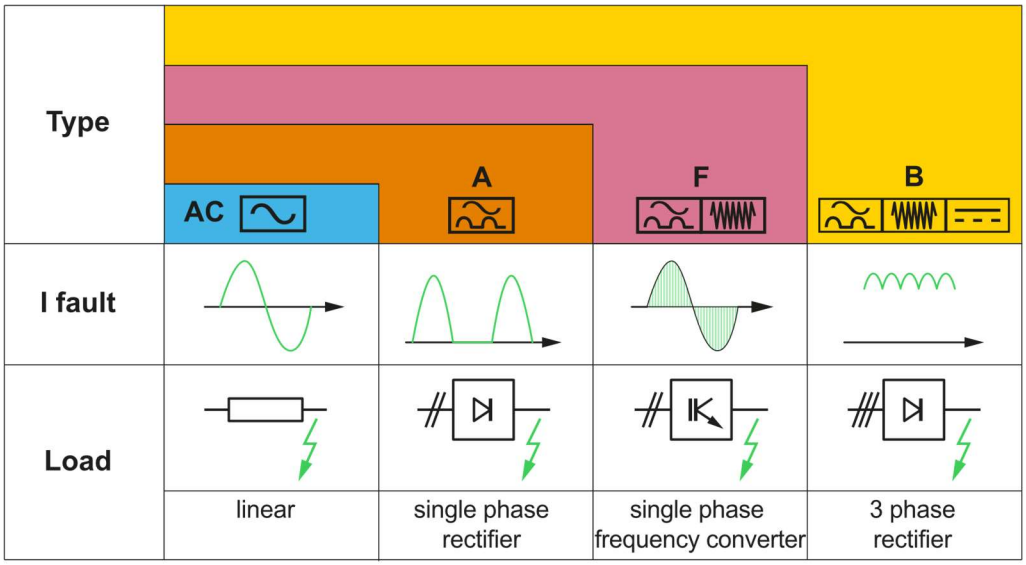

Different operating characteristics of residual current operated protective devices

5.4.2 System Selection Instructions

5.4.2.1 TT System

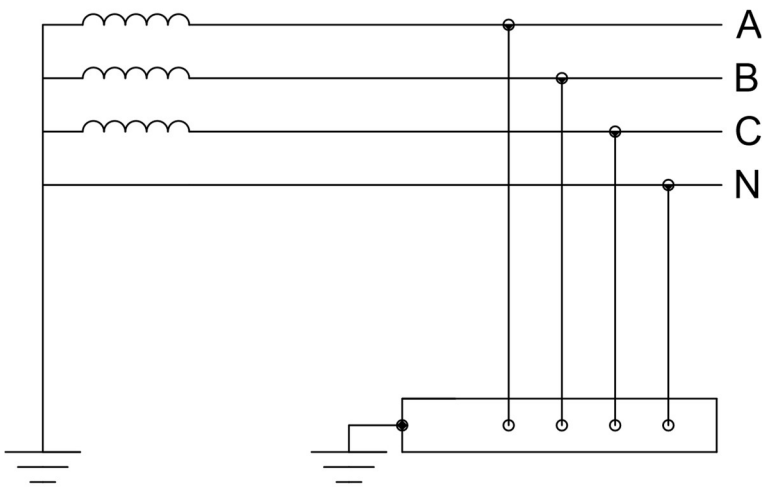

In this system, there is a point of direct grounding at the power supply end, and the exposed accessible parts of the electrical device are connected to a grounding conductor that is electrically independent of the power supply system grounding.

Characteristics: Limited by the ground resistance, the insulation fault current is low; insulation faults may cause electric shock hazards; because the fault current is too low, SCPD (short circuit protection device) cannot provide protection against insulation faults, and it is recommended to use RCD for protection.

RCD selection: threshold setting

$$I_{\Delta n} \leq \frac{U_L}{R_A}$$

R_A is the ground conductor resistance;

$I_{\Delta n}$ is the rated action value of the rated residual current protection device;

U_L is the rated safety voltage of electrical equipment. Choose 50V for normal working conditions and 25V for temporary electrical working conditions.

Rated residual operating current $I_{\Delta n}$	Maximum resistance of ground conductor（Ω）
Low sensitivity	
20A	2.5
10A	5
5A	10
3A	17
Moderate sensitivity	
1A	50
500mA	100
300mA	167
100mA	500
High sensitivity	
≤30mA	>500

Maximum trip time of protective device	
Phase voltage	Maximum delay (AC system)
50V＜U≤120V	0.3s
120V＜U≤230V	0.2s
230V＜U≤400V	0.07s
U＞400V	0.04s

5.4.2.2 TN-S System

In this system: the low-voltage neutral point of each power supply is directly grounded, all exposed

conductive parts of the device are connected to the earth (and the neutral point) through a protective conductor, and the PE line and the neutral line are led out from the power supply end respectively:

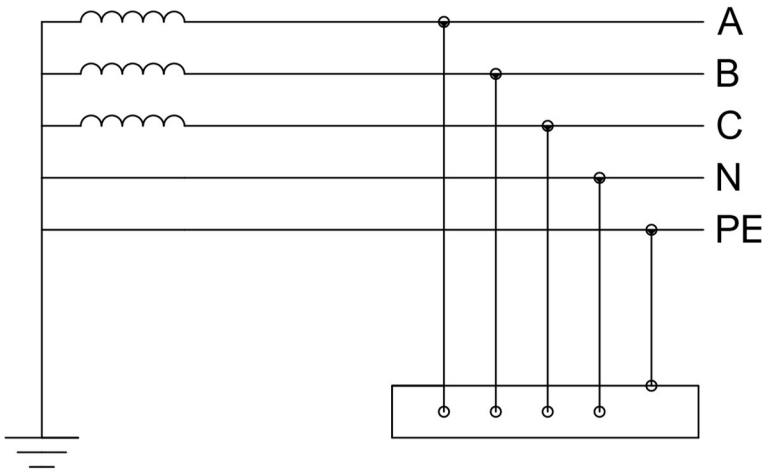

Characteristics: Fault current is very high and is limited only by the cable impedance; insulation fault may cause risk of electric shock and requires immediate disconnection of the line.

Selection of residual current operated protective device (only for TN-S system):

If a residual current operated protective device is used to provide automatic circuit disconnection protection for TN-S system, the following conditions should be met:

$$Z_S \times I_a \leq U_O$$

Where Z_S is the impedance of the fault loop consisting of the power supply, the live conductor to the fault point, and the protective conductor between the fault point and the power supply [Ω];

U_O is the nominal voltage between the phase lines;

I_a is the current that causes the circuit breaker to automatically operate.

Maximum trip time of TN-S system		
Nominal voltage to earth	Dry environment	Humid environment
50V＜U≤120V	0.8	0.4
120V＜U≤230V	0.4	0.2
230V＜U≤400V	0.2	0.1
U＞400V	0.1	0.1

Threshold setting

For conditions with high cable impedance (long cables) or low short-circuit power, the sensitivity of the residual current relay can be set low.

For long cables, the residual current detected by the residual current relay mainly comes from the

zero-sequence short-circuit current. By default, the setting value of the residual current relay can be set according to the following formula:

$$I_{\Delta n} \leq \frac{0.8U_O}{R_{ph} + R_{PE}}$$

Where Uo is the nominal phase-to-ground voltage, Rph is the resistance of the live conductor (phase or neutral) of the faulty circuit, and RPE is the resistance of the circuit protection conductor.

5.4.2.3 IT Syetem

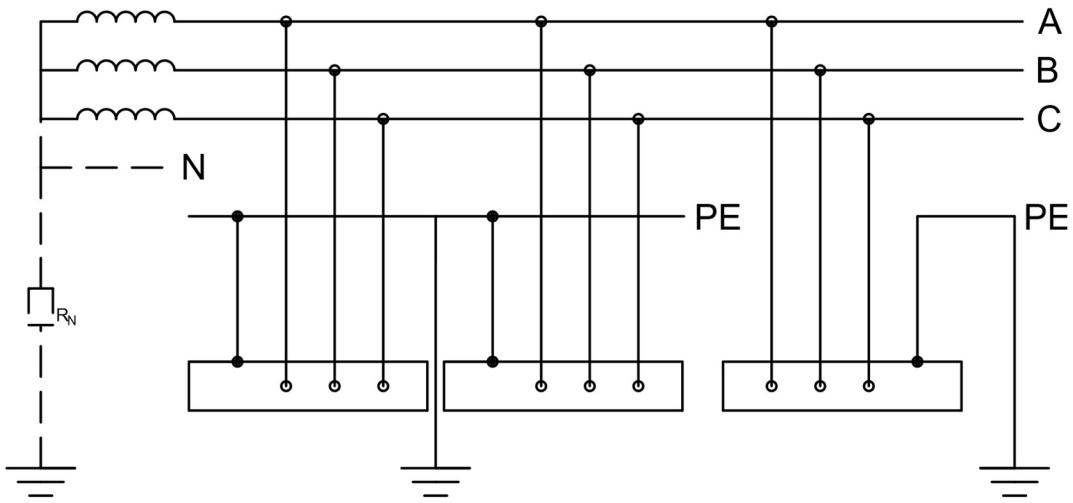

In this system, the neutral point of the transformer is not extracted or the neutral point is grounded via high impedance, and the exposed conductive parts are all interconnected and connected to the same grounding electrode

or are interconnected in groups, each group is connected to a given grounding electrode.

Characteristics

The first insulation fault usually does not require interruption. The fault must be detected, indicated and repaired before a second insulation fault occurs on another live conductor.

The second fault in the IT system, if the grounding conductors are not interconnected, requires the same protection as the TT system with one or more grounding electrodes

The second fault in the IT system, if the grounding conductors are interconnected, requires the same protection as the TN-S system.

5.4.3 Avoiding malfunction of residual current relays

The IΔn of the residual current protection device should fully consider the leakage current of the electrical circuit and equipment to the ground. If necessary, the leakage current value of the protected

circuit or equipment to the ground can be obtained through actual measurement.

5.4.3.1 Intrinsic leakage current at power frequency

The inherent leakage current is generally caused by the low insulation level between the phase conductor and the ground, or the presence of a filter (or capacitor) between the phase conductor and the ground. The inherent leakage current may be the leakage current of the power frequency or the leakage current of the harmonic.

The IΔn of the RCD should be greater than 2 times the normal leakage current.

(1)The leakage current limit of the PE conductor of electrical equipment.

The limit of the AC leakage current of the PE conductor ≤1kHz is as follows

Rated current of AC equipment	PE conductor AC current (≤1kHz)
0＜I≤2A	1mA
2A＜I≤20A	0.5mA/A
I＞20A	10mA

During normal operation of AC power equipment, the following limits on the leakage DC current component of the PE conductor should not be generated:

Device rated current	DC current component of PE conductor
0＜I≤2A	5mA
2A＜I≤20A	2.5mA/A
I＞20A	50mA

For plug-in electrical equipment with a rated input power not exceeding 4kVA, the limit of the DC leakage current component of the PE conductor shall not exceed 6mA.

For plug-in electrical equipment with a rated input power greater than 4kVA or fixed-connected electrical equipment (regardless of the rated input power), the manufacturer shall provide relevant protective measures in the operating manual.

When the DC leakage current component of the PE conductor is greater than 6mA, a Type B RCD should be used.

(2) For type A and AC residual current relays, they are only applicable to the rated power supply network frequency (usually 50Hz). In industrial production, frequency converters are used to change the speed of asynchronous motors. In order to meet EMC requirements, filters are usually installed in conjunction. If type A or AC residual current relays are installed in the system at the same time, as the system frequency increases, the residual current caused by stray capacitance and filters will increase, which can easily cause the residual current relay to malfunction.

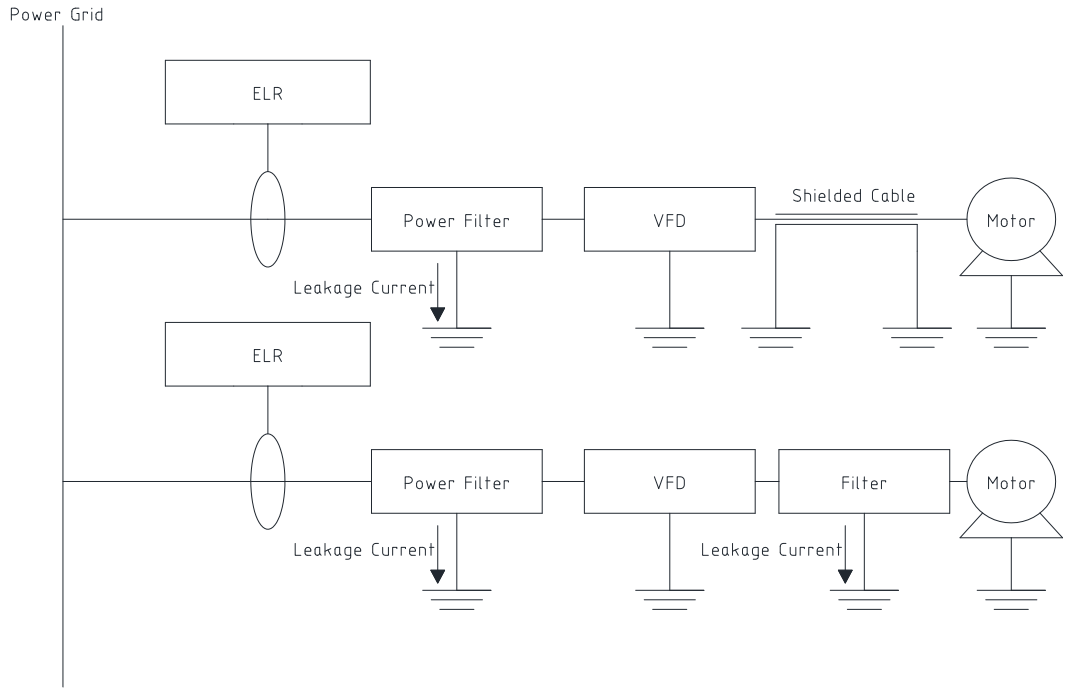

(3) The rated residual operating current $I_{\Delta n}$ should fully consider the normal leakage current value of the system. Generally, it should not be less than 2~4 times the maximum value of the normal measured leakage current or the empirical value I_X: when used as a single machine, $I_{\Delta n}>4I_X$; when used as a branch line, $I_{\Delta n}>2.5I_X$, and when the largest motor in the line is running, $I_{\Delta n}>4I_X$; when the main line or the whole network is distributed, $I_{\Delta n}>2I_X$.

Empirical formula:

Single-phase circuit: $I_{\Delta n} \geqslant I_n / 2000$ (lighting)

Three-phase circuit: $I_{\Delta n} \geqslant I_n / 1000$ (power or power-lighting mixed)

Where I_n is the rated current of the line circuit.

4) In order to ensure the selectivity of the hierarchical protection action, the current and time coordination between the upper and lower levels should comply with the following regulations:

$I_{\Delta n1}$ (upper level) $\geqslant$ $I_{\Delta n2}$ (lower level)

$I_{\Delta n1}$ (power supply side) $\geqslant$ $3I_{\Delta n2}$ (load side)

tF1 (upper level ASJ return time) > tF2 (lower level ASJ disconnection time), the time difference is not less than 0.2s.

The minimum non-action time of the power supply side ASJ should be greater than the total action time of the load side ASJ.

General branch line and terminal: 30~100mA, ⩽ 0.1s;

branch line: 300~500mA, 0.2~0.8s;

Main line: 500~1000mA⩽ 2s.

5.5 Instructions for Transformer

AKH-0.666L-XX(PB)series residual current transformer. The dimensions are shown in the following figure. (Unit: mm)

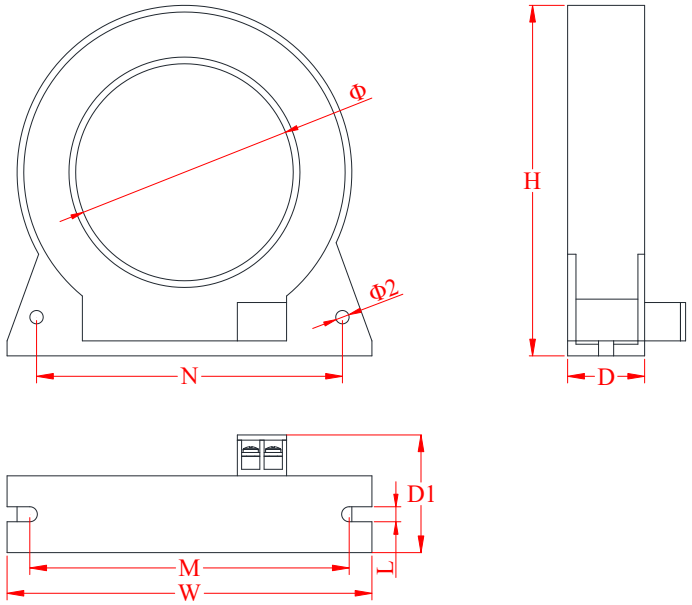

Product model	Rated current (A)	Overall dimensions (mm)			**Hole size (mm)**	Installation dimensions (mm)				Tolerance (mm)
		W	H	D	**Φ**	M	N	L	D1	
L-30(PB)	0~63	76	67	25	**30**	69	58	5	36	±2
L-45(PB)	63~160	98	86	28	**46**	87	72	5	39	
L-65(PB)	160~250	124	105	28	**65**	110	96	6	39	
L-80(PB)	250~400	140	130	32	**80**	122	106	6	43	
L-100(PB)	400~630	167	148	32	**100**	153	129	6	43	
L-120(PB)	630~800	188	172	32	**120**	170	142	6	43	
L-150(PB)	800~1000	225	206	32	**150**	205	178	6	43	

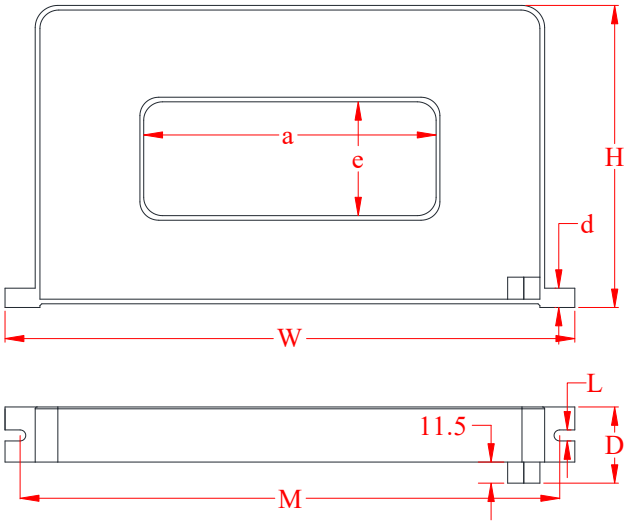

Product model	Reference current (A)	Overall dimensions (mm)			**Hole size (mm)**		Installation dimensions (mm)		
		W	H	D	**a**	**e**	Φ	N	d
L-110&25(PB)	0~100	186	70	28	**112**	**25**	6	171	10
L-140*35(PB)	100~200	214	81	28	**142**	**35**	6	200	10
L-190*35(PB)	250~400	270	85	28	**192**	**35**	6	256	10
L-230*45(PB)	450~600	310	95	28	**232**	**46**	6	295	10
L-300*60(PB)	600~1000	426	127	45	**300**	**60**	6	396	15

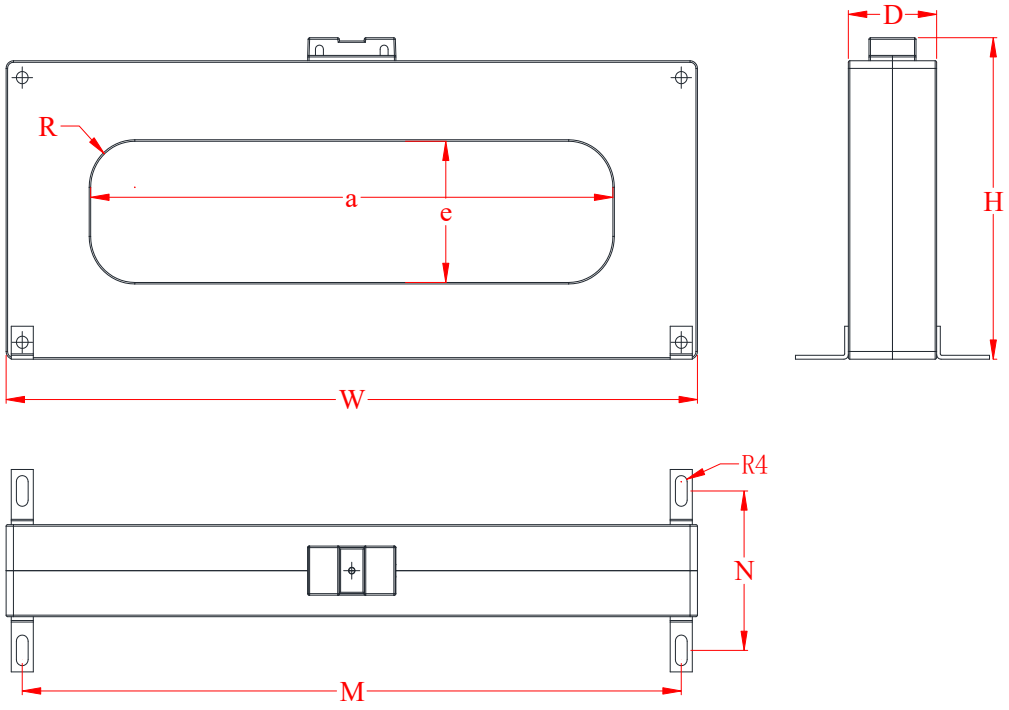

Product model	Reference current (A)	Overall dimensions (mm)	**Hole size (mm)**	Installation dimensions (mm)

		W	H	D	**a**	**e**	**R**	M	N
L-400*120(PB)	1000~1250	504	243	60	**400**	**120**	**50**	472	112
L-500*150(PB)	1500~2000	612	291	60	**500**	**160**	**70**	580	112

Explain: The current transformer with corresponding specifications should be selected according to the rated current of the circuit and the thickness of the wire. (If you have special requirements on the shape and range of the transformer, please contact us)

6 Typical Applications

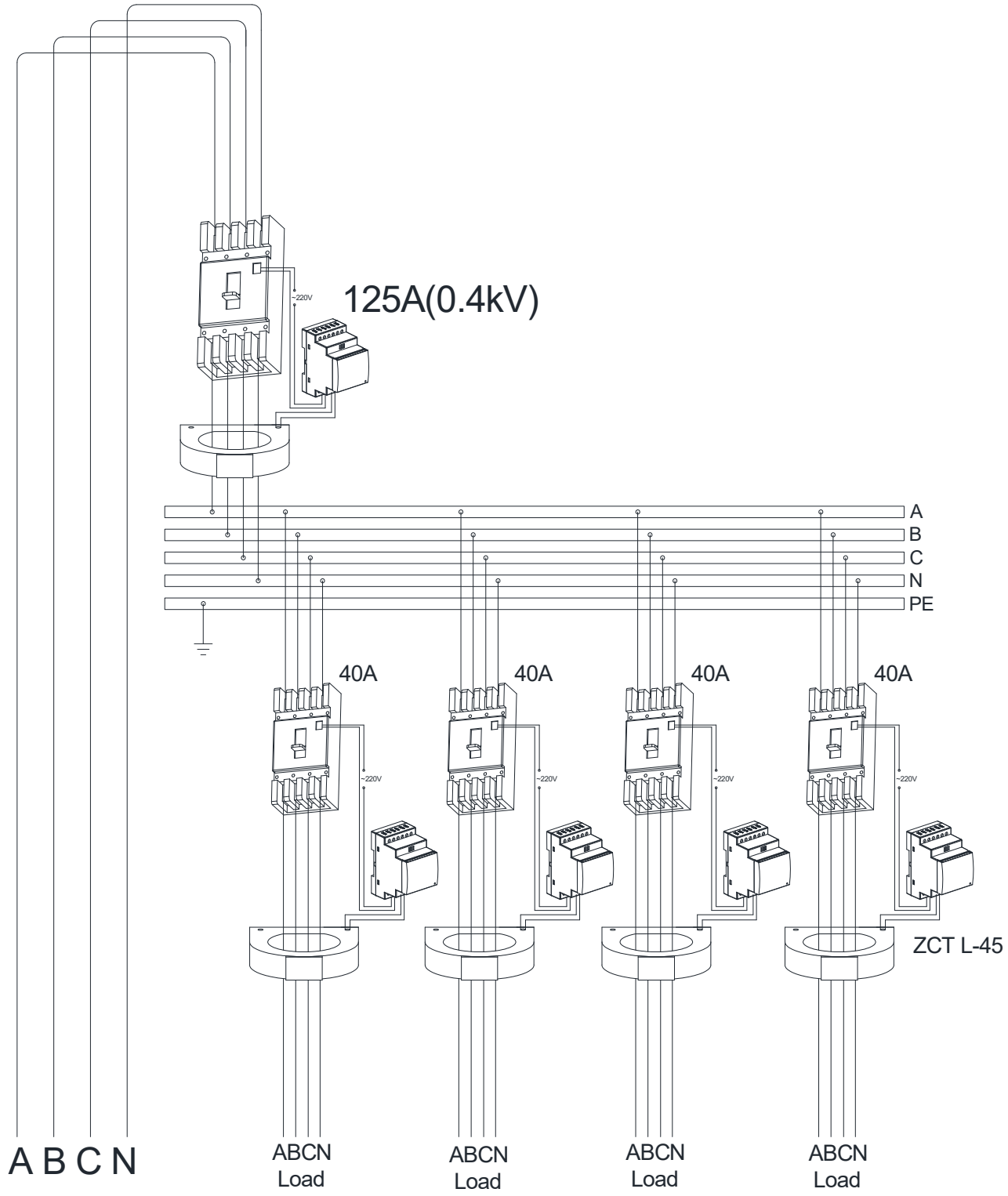

7 Programming Menu

Chapters 7 and 8 apply only to ASJ10L-LD1A.

First Menu	Second Menu	Third Menu	Descriptions
Addr	1~247	none	Address setting
bAUd	1200, 2400, 4800,	none	Communication Baud rate setting

	9600, 19200, 38400		
AL	Select a modified bit	modified bit	Rated residual operating current setting
AL.Pr	Select a modified bit	modified bit	Warning operating current setting
rSt.P	Select a modified bit	modified bit	Alarm, warning operating current return value [9]
Td	Select a modified bit	modified bit	Limit non-driving time setting
Mod	000,001,010,011,100,101, 110, 111	none	Bit2Bit1Bit0,For details see attached table "Mod Menu Description"
Brk	on/oFF	none	Disconnection alarm setting: on/off
LCd	0~9999	none	Backlight setting, 0: backlight is always bright; 1~9999 adjustable. Unit: second
PASS	1~9999	none	Password setting
TimE	Year, month, day, hour, minute	Modify time	Time setting
AL.Sw	on、oFF、LEd	Alarmn mode adjustment	on: normal alarm plus action plus recording Led: alarm only lights up the LED oFF: no alarm
CT	1000、2000、2500	Transformer ratio matching	Select according to the connected residual current transformer ratio
Clr	yes/no	none	Yes: clear the event log

Mod menu description:

bit2	0	Manual reset
	1	Automatic reset
bit1	0	Relay AL1 terminals 97,96 are normally closed by default, 96,95 are normally open by default
	1	Relay AL1 terminals 97,96 are normally open by default, 96,95 are normally closed by default
bit0	0	Relay AL2 terminals 10 and 9 are normally open by default
	1	Relay AL2 terminals 10 and 9 are normally closed by default

After entering the first level menu, short press PROG key to enter the second level menu,

Td/+ key and Td/- key are used to switch channels between the second level menu, then press PROG key, use Td/+ key and Td/- key to modify the specific value. When you're done, press PROG or RESET to return. After the modification is completed, press RESET key to exit. Before exiting, you should choose whether to save or not. Press the RESET key again to avoid saving and press PROG key to save (when setting the real-time time, it will be saved after modified).

Note: 9. The default percentage of return value of alarm and early warning action current is 85%. When the leakage current is less than 85% of the rated remaining action current, the alarm relay AL1 will reset; when the leakage current is less than 85% of the rated remaining action current, the early warning relay AL2 will reset (the instrument needs to be set to automatic reset mode).

7.1 Programming Example

The following is a few programming diagrams, users can refer to these examples to program menu items of the same level.

(1) View SOE records in running mode

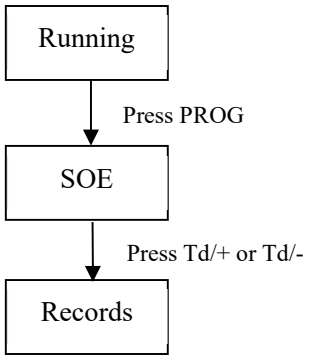

Each SOE consists of two pages, and the SOE format is as follows:

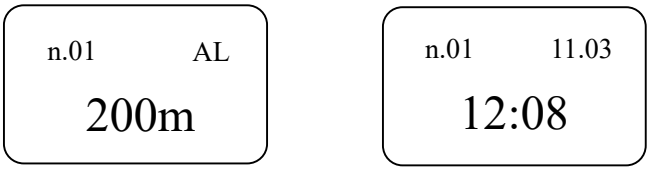

The "n.01" indicates the latest event record, and so on. A maximum of 25 event records can be stored.

AL indicates that the record is generated by the residual current alarm action, and AL.pr indicates that it is generated by the early warning action.

The figure above shows that the first event record is generated by the residual current alarm action, the alarm value is 200mA, and the time is 12:08 on November 3rd.

(2) Set the remaining current action value to 50mA, where _ indicates the modified position.

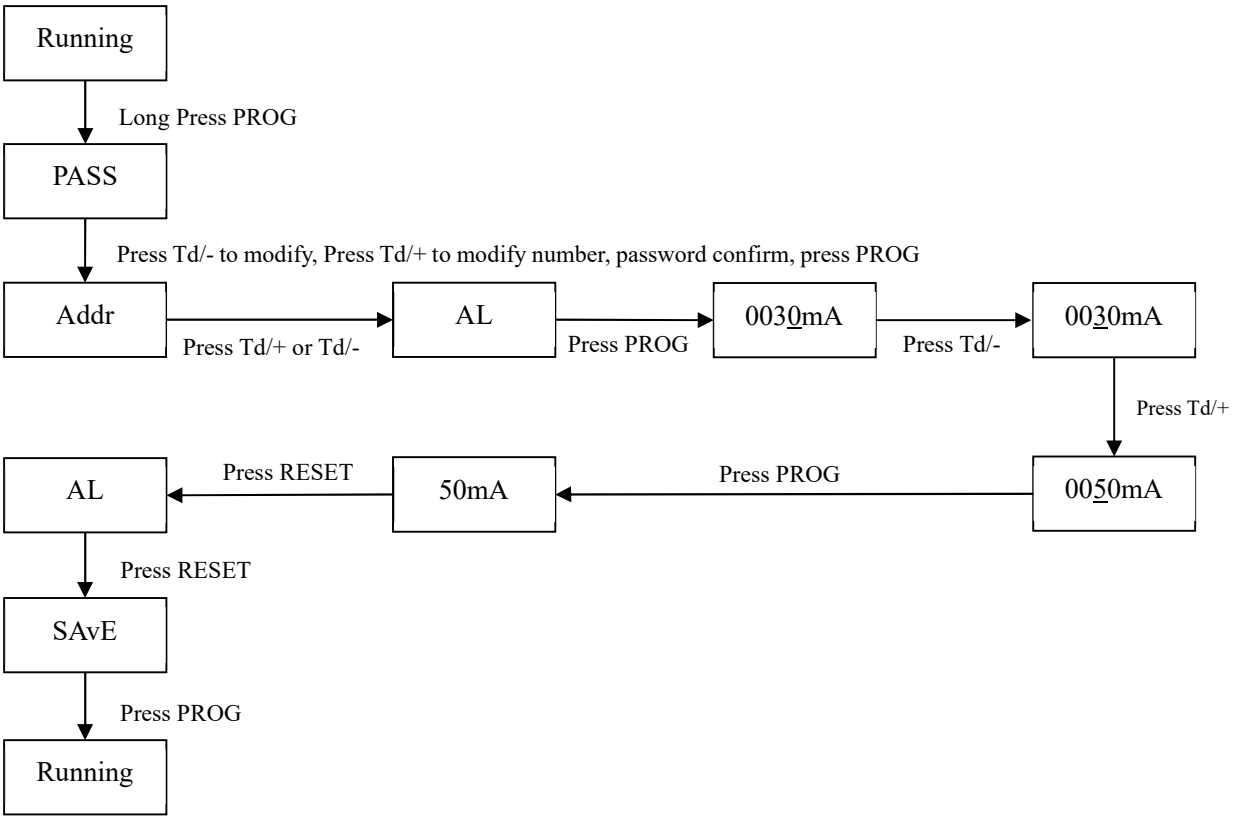

(3)Set the limit non-driving time to 60ms.

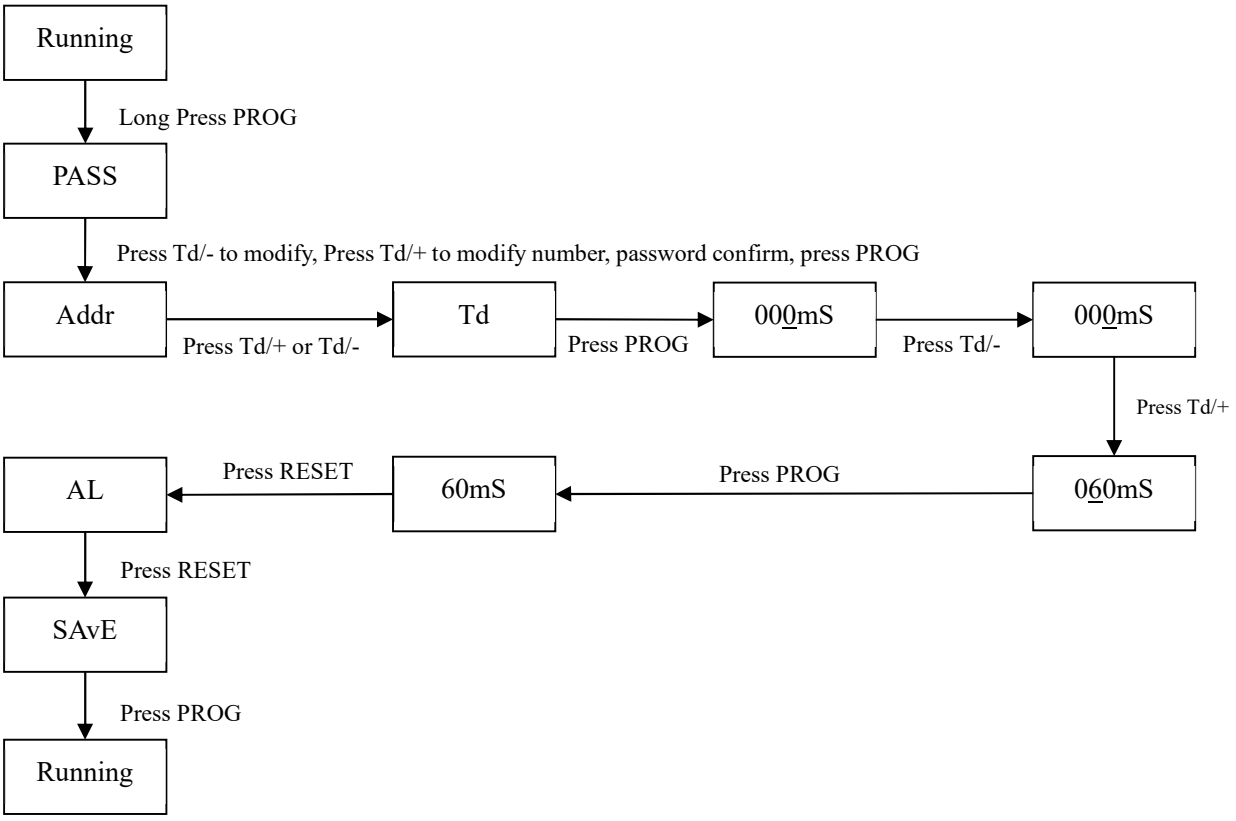

7.2 Programming Example

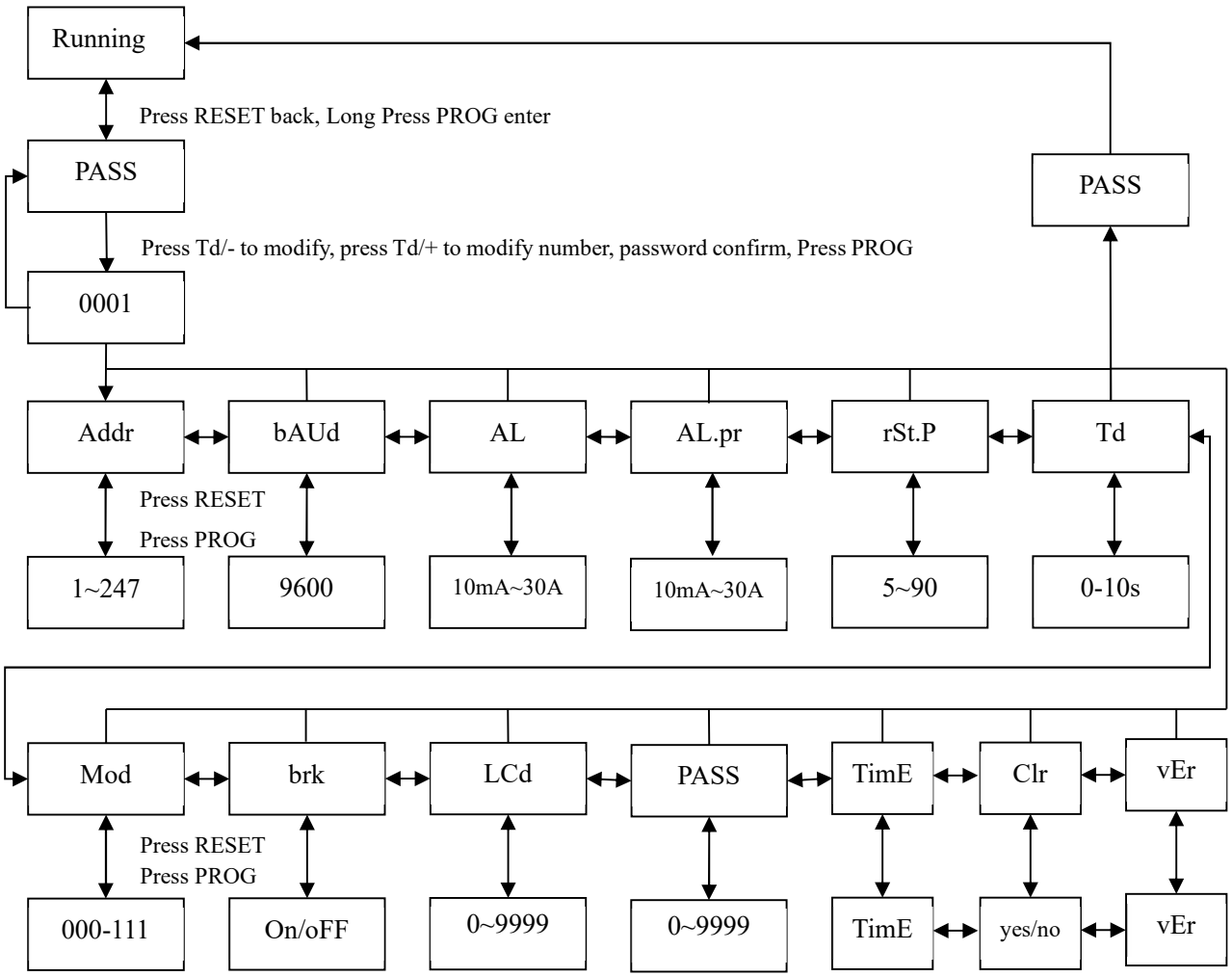

8 Communication Guide

8.1 Communication Protocol

Meter RS485 interface adopts Modbus-RTU communication protocol, which defines the address,

function code, data, check code in detail. It is the necessary content to complete the data exchange

between the host and slave machine.

8.2 Introduction to Function Code

8.2.1 Function code 03H or 04H: Read the registers

This function allows the user to acquire the data collected and recorded by equipment and the system parameters. The number of data requested by hosts has no limit, but cannot exceed the defined address range.

The following example shows how to read a measured insulation resistance value from No.01 slave computer, with the address of the value of 0008H.

The host computer sends	Send message
Address code	01H

The slave computer returns	Return message
Address code	01H

Function code		03H
Start address	High byte	00H
	Low byte	08H
Number of registers	High byte	00H
	Low byte	01H
CRC check code	Low byte	05H
	High byte	C8H

Function code		03H
Bytes		02H
Register data	High byte	00H
	Low byte	50H
CRC check code	Low byte	B8H
	High byte	78H

8.2.2 Function code 10H: Write the registers

The function code 10H allows the user to change the contents of multiple registers, which can write the time and date in this meter. The host can write up to 16 (32 bytes) data at a time.

The following example shows a preset address of 01 with an installation date and time of 12:00, Friday, December 1, 2009.

The host computer sends		Send message
Address code		01H
Function code		10H
Start address	High byte	00H
	Low byte	04H
Number of registers	High byte	00H
	Low byte	03H
Number of registers		06H
0004H data	High byte	09H
	Low byte	0CH
0005H data	High byte	01H
	Low byte	05H
0006H data	High byte	0CH
	Low byte	00H
CRC check code	Low byte	A3H
	High byte	30H

The slave computer returns		Return message
Address code		01H
Function code		10H
Start address	High byte	00H
	Low byte	04H
Number of registers	High byte	00H
	Low byte	03H
CRC check code	Low byte	C1H
	High byte	C9H

8.3 ASJ10L-LD1A Address Table

No.	Address	Parameter	Read-Write	Value Range	Data Type
0	00H	Residual current value	R	0~30000mA	UINT16
1~7	01H~07H	Reserved			UINT16*7
8	08H	Alarm current setting	R/W	10~30000mA（default 30000）	UINT16
9	09H	Warning current setting	R/W	10~30000mA（default 30000）	UINT16
10~15	0AH~0FH	Reserved			UINT16*6
16	10H	Limit non-trip time value	R/W	0~10000ms (default 0)	UINT16
17~23	11H~17H	Reserved			UINT16*7
24	18H	Address	R/W	1~247 (default 1)	UINT16
25	19H	Baud rate	R/W	0, 1, 2, 3, 4, 5 correspond to 38400, 19200, 9600, 4800, 2400, 1200 (default 2)	UINT16
26	1AH	ZCT disconnect alarm setting	R/W	bit15~bit3: Reserved bit2~ bit0: disconnect alarm set 000: close 001: open (default 0)	UINT16
27	1BH	Alarm status	R	bit15~bit3: Reserved bit2~bit0: Alarm status 000: normal 001: Warning 010: Alarm 100: disconnect	UINT16
28	1CH	Mode setting	R/W	See 8.4 for details	UINT16
29	1DH	Protection password	R/W	0000~9999（default 0001）	UINT16
30	1EH	DI status	R	bit15~bit3: Reserved bit1~bit0: DI status 00: All open 01: Ch1 close 10: Ch2 close 11: all close	UINT16
31	1FH	Backlight delay	R/W	0~9999; 0: Aways light; 1~9999 settable (default 60s)	UINT16
32	20H	DO Status	R	Bit0-AL1, Bit1-AL2, 1-closed, 0-open	UINT16
33	21H	Alarm mode	R/W	0: Normal alarm plus action	UINT16

				plus SOE recording 1: Alarm only lights up the LED 2: No alarm	
34	22H	CT ratio	R/W	0:1000/1 1:2000/1 2:2500/1	UINT16
35	23H	Reset	R/W	Write 1 to reset	UINT16
36	24H high	Year	R/W	00~99 stand for 2000~2099	UINT16
	24H low	Month	R/W	1~12	
37	25H high	Day	R/W	1~31	UINT16
	25H low	Hour	R/W	0~23	
38	26H high	Minutes	R/W	0~59	UINT16
	25H low	Second	R/W	0~59	
39	27H	Software Version	R		UINT16
40~44	28H~2CH	Reserved			UINT16*5
45	2DH	First SOE	Alarm setting value	R	10~30000mA	UINT16
46	2EH		Actual alarm value	R	0-30000mA	UINT16
47	30H High		Year	R	alarm time - year	UINT16
	30H Low		Month	R	alarm time - month	
48	31H High		Day	R	alarm time - day	UINT16
	31H Low		Hour	R	alarm time – hour	
49	32H High		Minutes	R	alarm time – minute	UINT16
	32H Low		Second	R	alarm time – seconds	
50~169	32H~A9H	Other 24 SOEs		R	For details, see the first event record	UINT16*120

8.4 1CH Data Explain

The parameter of address 1CH represents the current setting value, as shown in the table below.

High 8	bit15	bit14	bit13	bit12	bit11	bit10	bit9	bit8
Low 8	bit7	bit6	bit5	bit4	bit3	bit2	bit1	bit0

valid bit

bit2	0	Manual reset
	1	Automatic reset
bit1	0	The terminals 97 and 96 of relay are normally closed by default and 96 and 95 are normally open by default
	1	The terminals 97 and 96 of relay are normally open by default and 96 and 95 are normally closed by default
bit0	0	Relay AL2 terminals 10 and 9 are normally open by default
	1	Relay ALl2 terminals 10 and 9 are normally closed by default

Headquarters:AcrelCo.,LTD.
Address:No.253YulvRoadJiadingDistrict,Shanghai，China
TEL.:+8617821101655
Web-site:www.acrel-group.com
E-mail:Lynn@acrel-electric.com
Postcode:201801